Appendix B – Framing Details

Exterior Doors

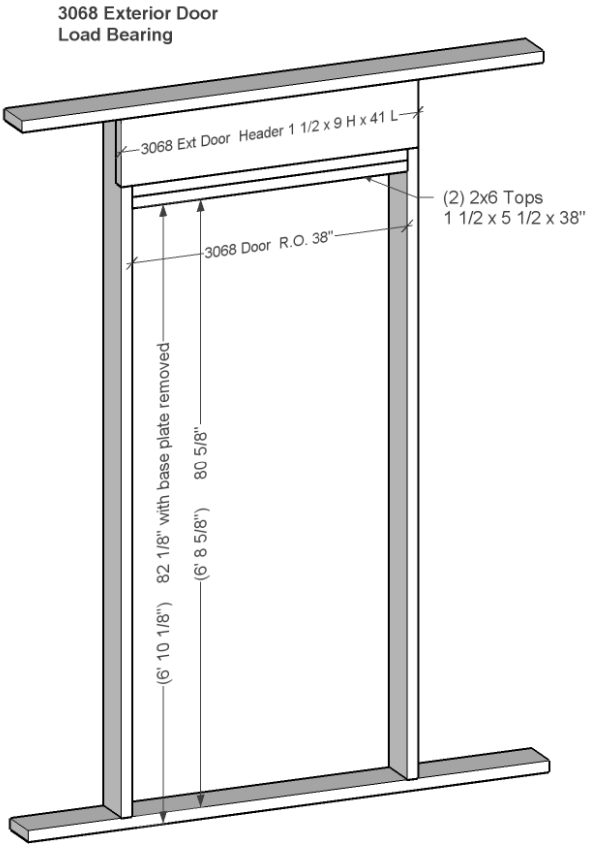

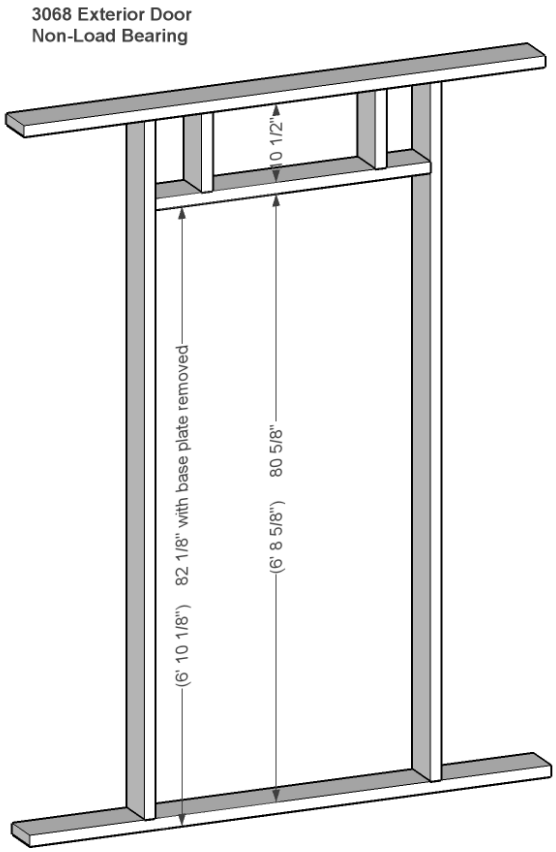

Allow ≥ 3 ½" on each side of the rough opening for drywall, reveal, and casing.

Rough Opening is 38" x 80 5/8"
(38 x 82 3/8 w/ bottom plate cut out)

3068 Exterior Door Load Bearing		3068 Exterior Door Non-Load Bearing	
Header	1 ½ x 9 x 41	Top	1 ½ x 5 ½ x 38
(2) 2x6 Tops	1 ½ x 5 ½ x 38	Cripples	1 ½ x 5 ½ x 10 1/2
(2) Jacks	2x6 Precuts with 1 ½ x 9 notch	(2) 2x6 Precuts	

Note: Shed doors are non-load bearing.

Printed: 2010-02-06

Appendix B – Framing Details

Windows (Load Bearing)

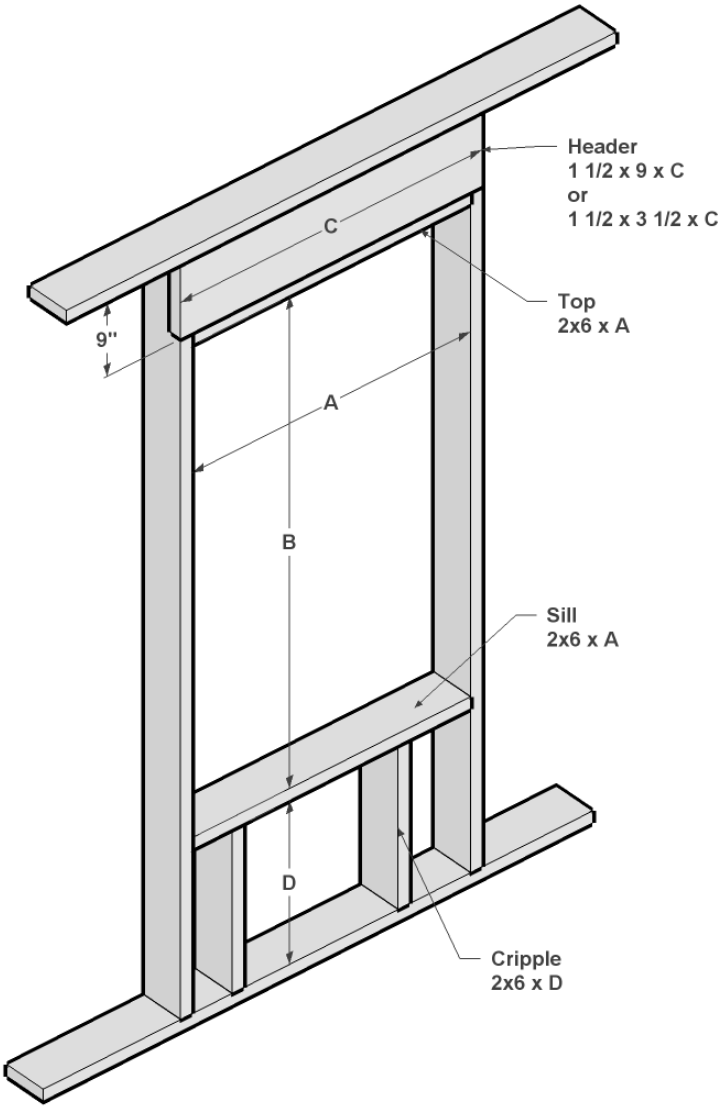

Allow >= 3 ½" on each side of rough opening for casing and drywall.

... AND …
Remember that by code the sill must be at least 18" off the floor (finished floor to finished sill) – especially important if you are installing windows taller than 5'.

Window **(Nominal Size)**	**Rough Opening A x B**	**Header 1 ½ x 9 x C**	**Top or Sill 2x6 x A**	**Cripples 2x6 x D**
2050 (24" x 60")	24 1/2 x 60 ½	27 ½	24 ½	2 @ 20 1/8
Double 2050 (48" x 60")	50 x 60 ½	53	50	3 @ 20 1/8
3030 (36" x 36")	36 1/2 x 36 ½	39 ½	36 ½	2 @ 44 1/8
3044 (36" x 52")	36 1/2 x 52 ½	39 ½	36 ½	2 @ 33 5/8
3050 (36" x 60")	36 1/2 x 60 ½	39 ½	36 ½	2 @ 20 1/8
3050 Double (72" x 60")	74 x 60 ½	77	74	3 @ 20 1/8

Printed: 2010-02-06

Appendix B – Framing Details

Windows (Non-Load Bearing)

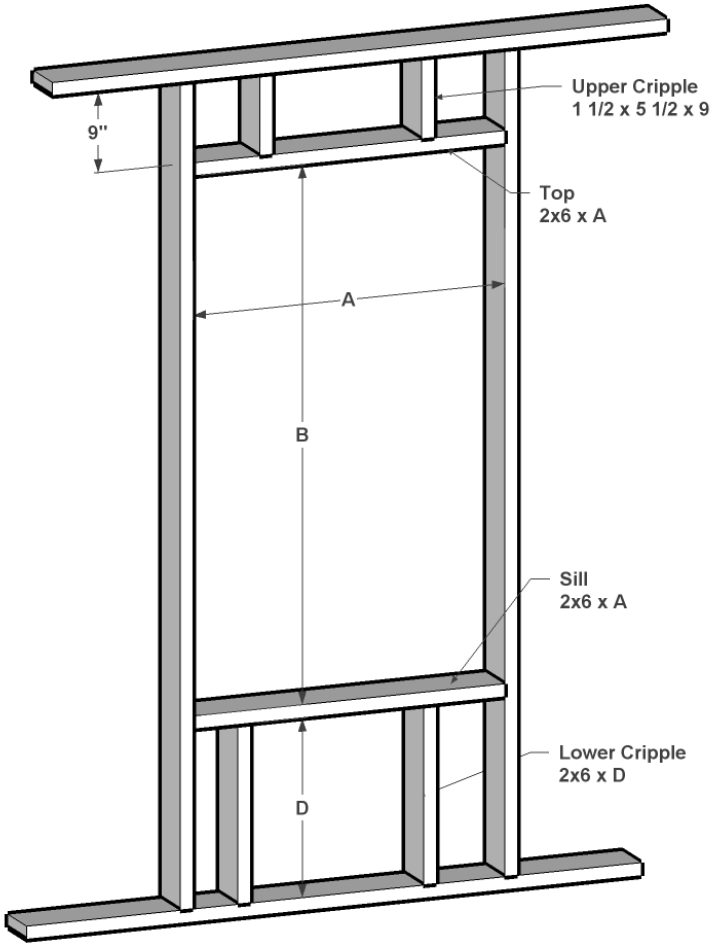

Allow >= 3 ½" on each side of rough opening for casing and drywall.

... AND … Remember that by code the sill must be at least 18" off the floor (finished floor to finished sill) – especially important if you are installing windows taller than 5'.

Window **(Nominal Size)**	**Rough Opening A x B**	**Top or Sill 2x6 x A**	**Lower Cripples 2x6 x D**	**Upper Cripples 2x6 x 9**
2050 (24" x 60")	24 1/2 x 60 ½	24 ½	2 @ 20 1/8	2 @ 9
Double 2050 (48" x 60")	50 x 60 ½	50	3 @ 20 1/8	3 @ 9
3030 (36" x 36")	36 1/2 x 36 ½	36 ½	2 @ 44 1/8	2 @ 9
3044 (36" x 52")	36 1/2 x 52 ½	36 ½	2 @ 33 5/8	2 @ 9
3050 (36" x 60")	36 1/2 x 60 ½	36 ½	2 @ 20 1/8	2 @ 9
3050 Double (72" x 60")	74 x 60 ½	74	3 @ 20 1/8	3 @ 9

Appendix B – Framing Details

Interior Doors

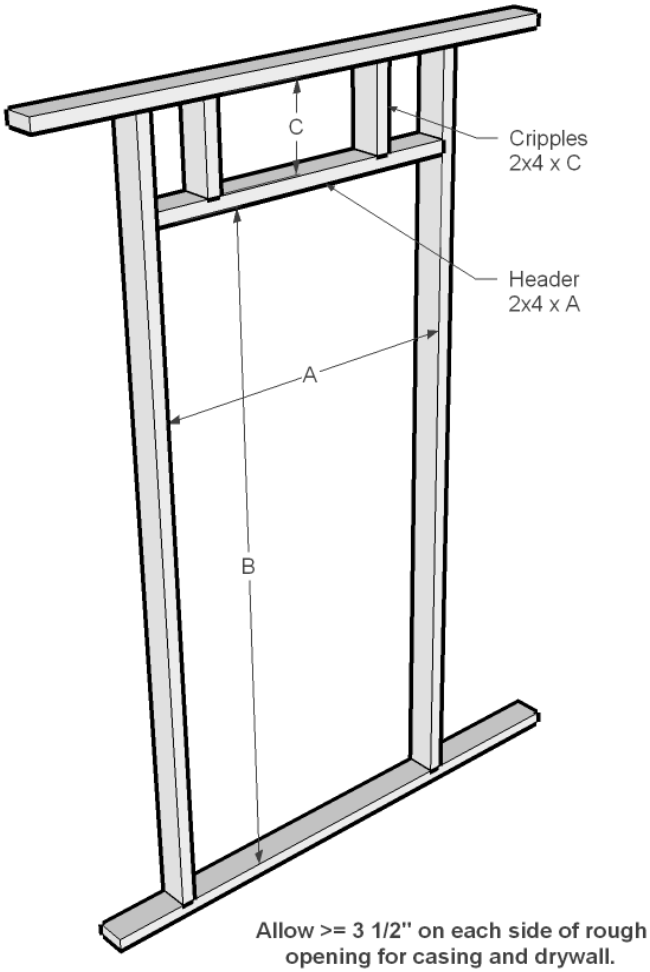

Door	Rough Opening A x B	2x4 Header A	2x4 Cripples C
1668 Interior (18”)	20” x 81 1/8”	20”	10”
2068 Interior (24”)	26” x 81 1/8”	26”	10”
2868 Interior (32”)	34” x 81 1/8”	34”	10”
3068 Interior (36”)	38” x 81 1/8”	38”	10”
3068 Bihinge (36” Closet)	38” x 81 1/8”	38”	10”
4068 Bihinge (48” Closet)	50” x 81 1/8”	50”	10”
4068 Bifold (48” Mechanical)	49” x 80 ¼”	49”	10 7/8”
5068 Bifold (60” Utility/Laundry)	61” x 80 ¼”	61”	10 7/8”

Prebuild Components

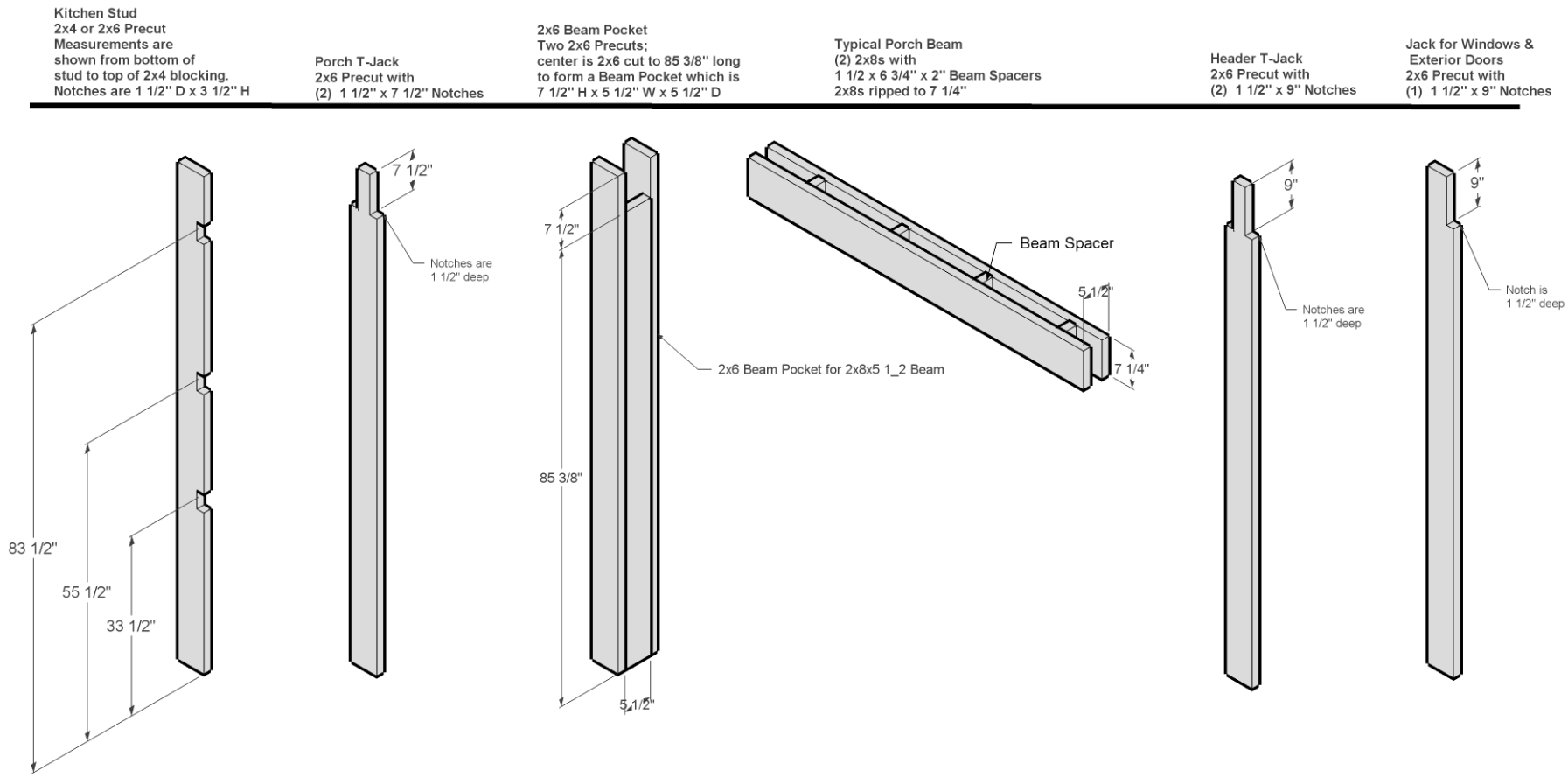

Ladders & Shelves

Ladder Sets and Shelves
20081117

Note: rung centered @ 48" will interfere in a 2x4 wall if a light switch is required.

Ladder Set Regular
Top of 2x4 at
5, 26", 50", & 74" from subfloor
(rung at 50" is for drywall blocking;
c/l of stud is at ~48" from subfloor)

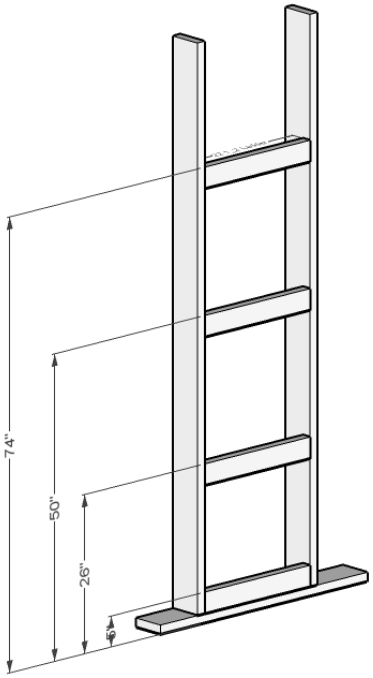

Ladder Set Hanging
Bedroom, Coat, & Laundry
Top of 2x4 at
5, 26", 50", 64", & 74" from subfloor
(rung @ 64" supports closet shelf,
rung at 50" is for drywall blocking;
c/l of rung is at ~48" from subfloor))

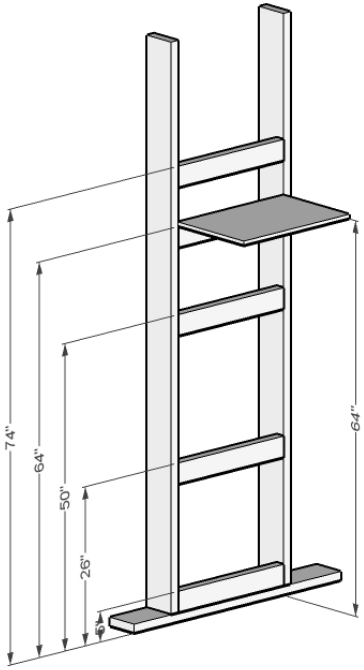

Ladder Set Linen
Top of 2x4 at
5", 24", 40", 50", 56", & 72" from subfloor
(rung at 50" is for drywall blocking;
c/l of rung is at ~48" from subfloor)

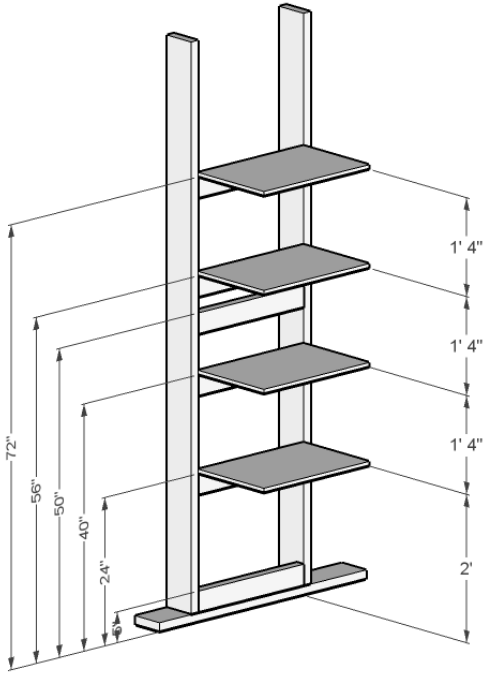

Ladder Set Pantry
Top of 2x4 at
5", 24", 40", 48 1/2", 52", 64", & 76" from subfloor
(rung at 48 1/2" is for drywall blocking;
if a 2x6 is used at 52" none is needed at 48 1/2")

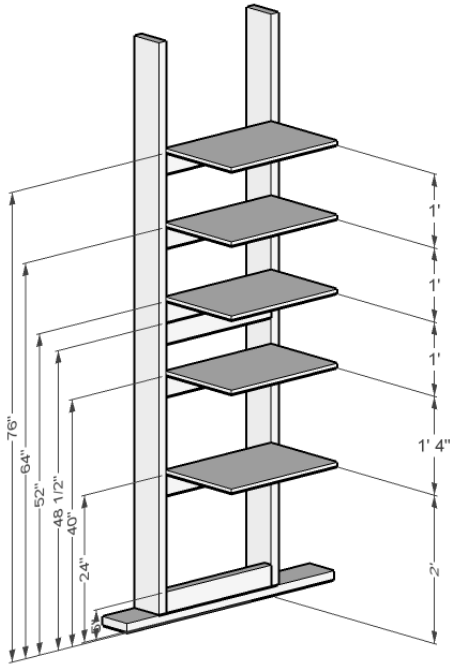

6' Windows

2060 or 3060 Window

Note: Code requires that the sill be a minimum of 18" from the floor, so the header for a 6' window is different. This window is shown in a wall that is NOT load-bearing.

Allow >= 3 1/2" on each side of rough opening for casing and drywall.

Rough Opening is: 2060 24 1/2 x 72 1/2
3060 36 1/2 x 72 1/2
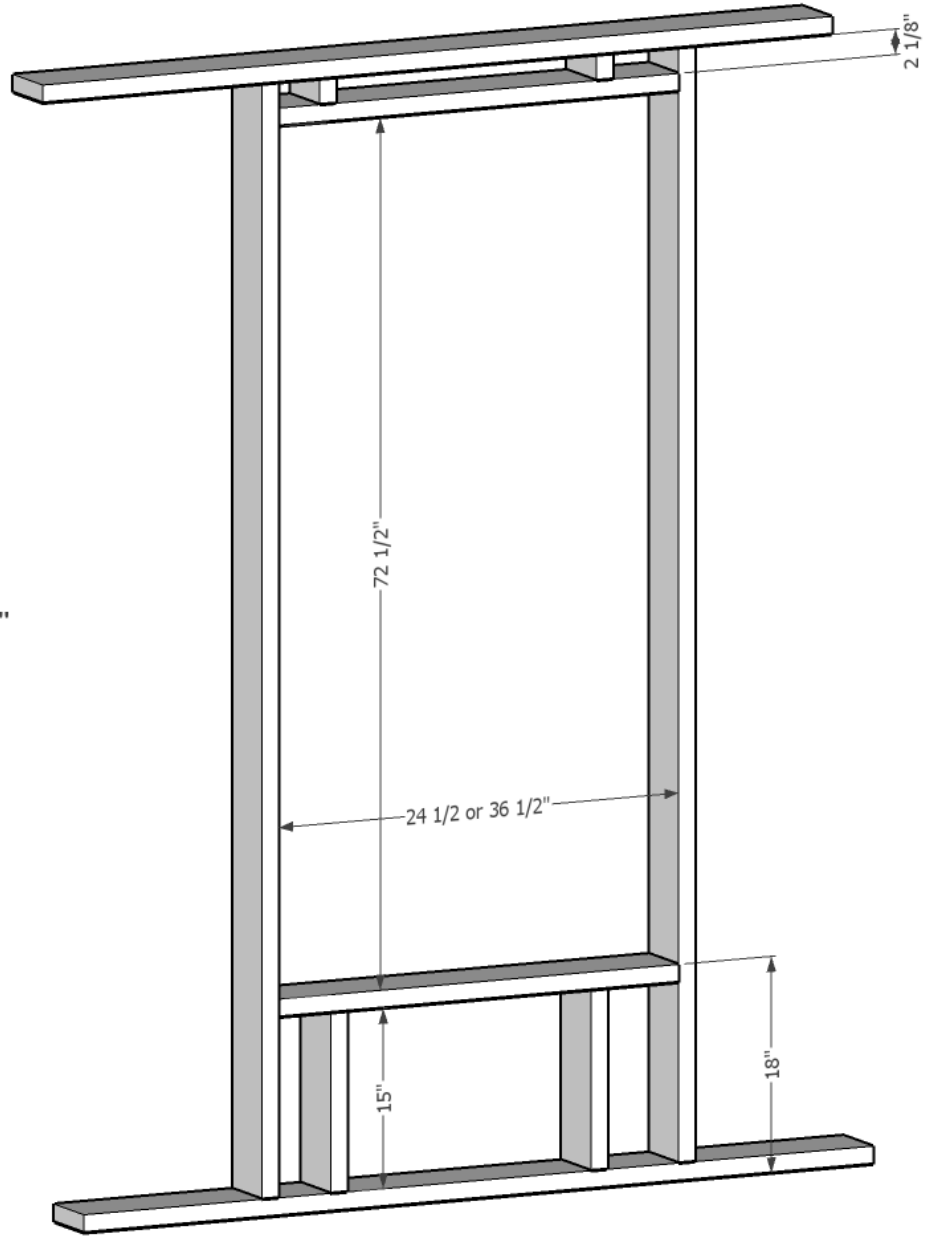
2 Top/Sill	1 1/2 x 5 1/2 x 24 1/2 or 36 1/2"
2 Cripples (bottom)	1 1/2 x 5 1/2 x 15"
2 Cripples (top)	1 1/2 x 5 1/2 x 2 1/8"
2 2x6 Precuts	2x6 Precuts